READY2GO

ASSEMBLY INSTRUCTIONS

HIROKO

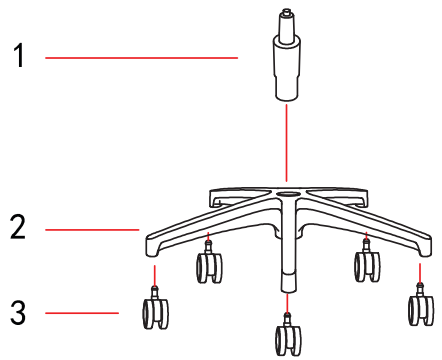

Step 1

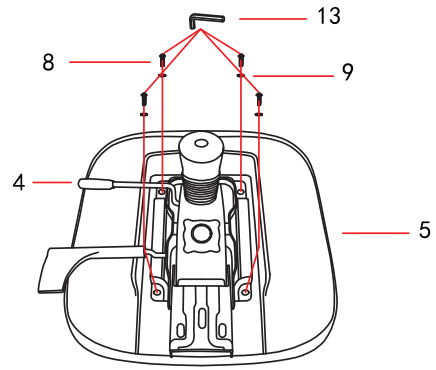

Step 2

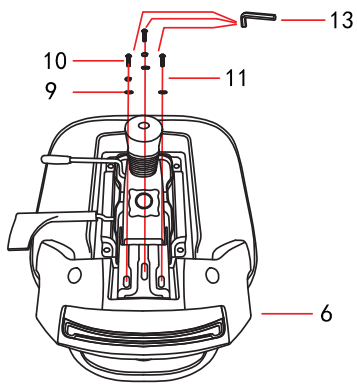

Step 3

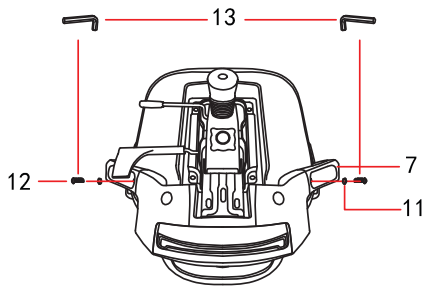

Step 4

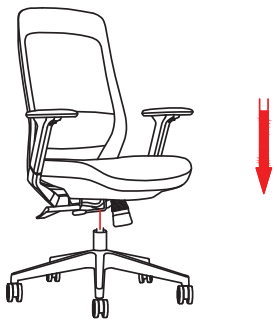

Step 5

Step 6

	NO.	1	2	3	4	5	6	7	8	9	10	11	12	13	14	15	16	17	18
6241B	SKETCH																		
	SIZE								M6X45MM	M8X17MM	M8X60MM	M8X17MM	M8X45MM	M5					
	QTY	1pcs	1pcs	5pcs	1pcs	1pcs	1pcs	2pcs	4pcs	7pcs	3pcs	5pcs	2pcs	1pcs					