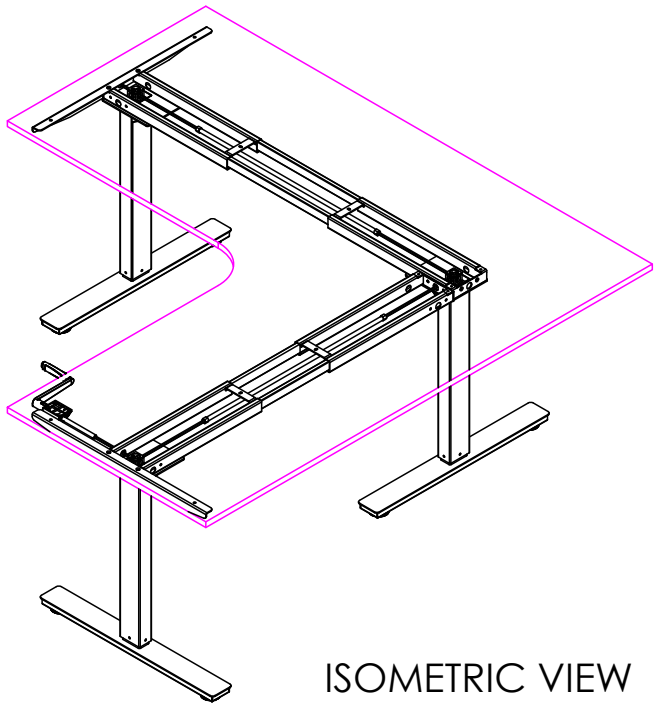

ISOMETRIC VIEW

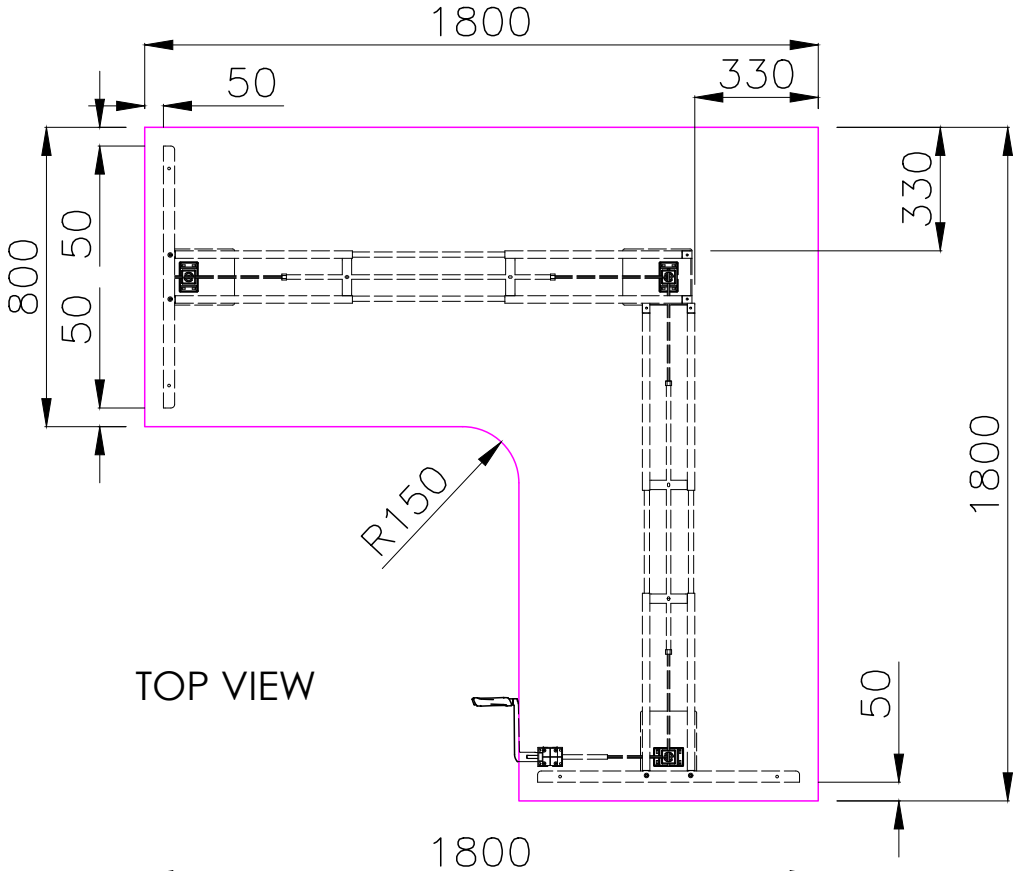

TOP VIEW

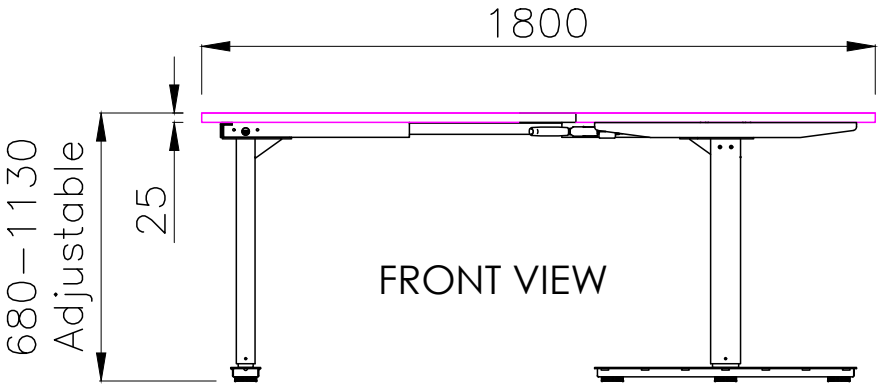

FRONT VIEW

READY2GO FURNITURE

PRODUCT CODE:	REMARKS:
ED-MC	-
ASSEMBLED SIZE: 1500L x 750D x 680-1130H	© 2021 READY TO GO FURNITURE PTY LTD

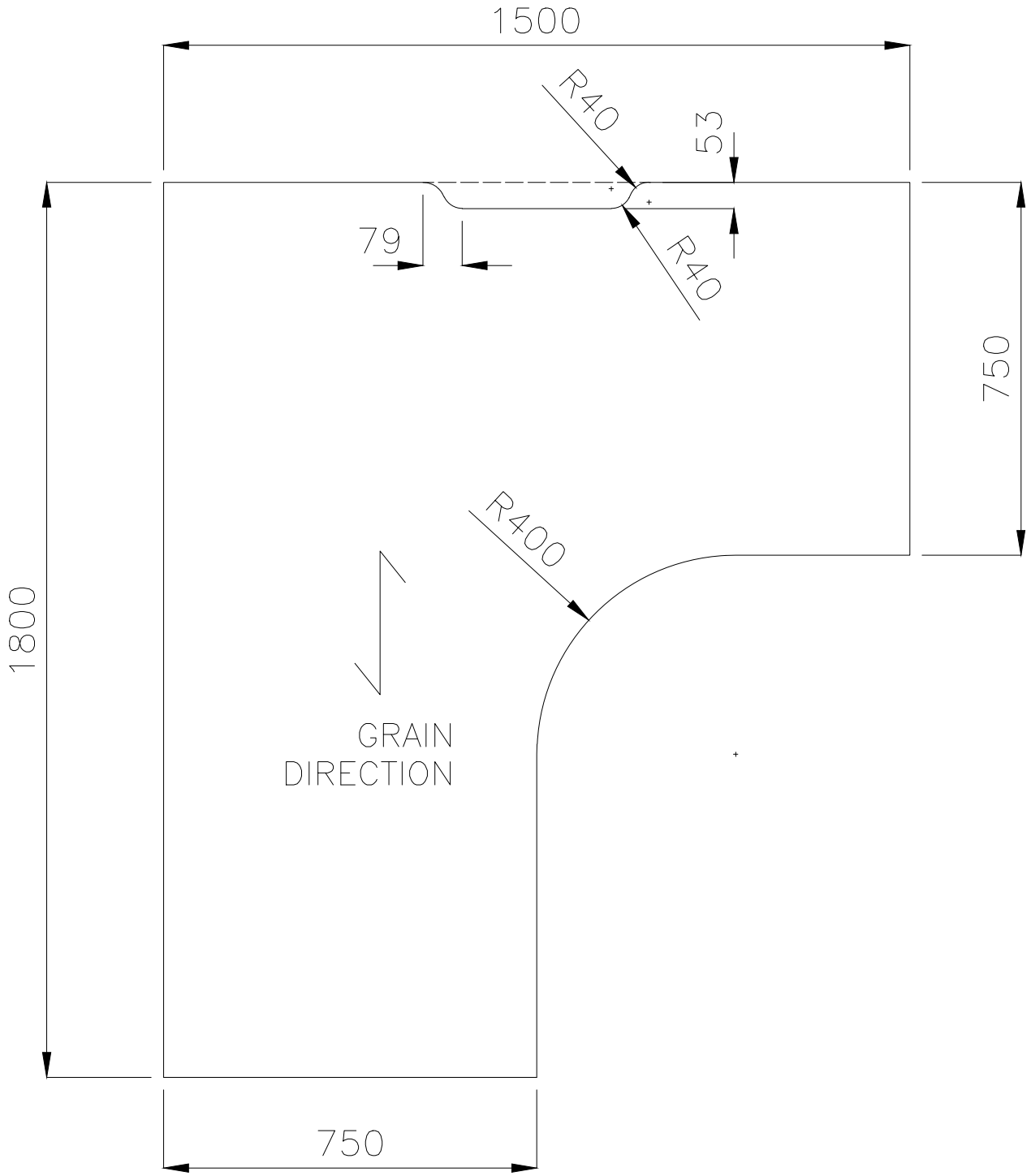

READY2GO FURNITURE

PRODUCT CODE:	REMARKS:
R2O-WST15187	-
ASSEMBLED SIZE:	
-	

2022
READY TO GO FURNITURE PTY LTD