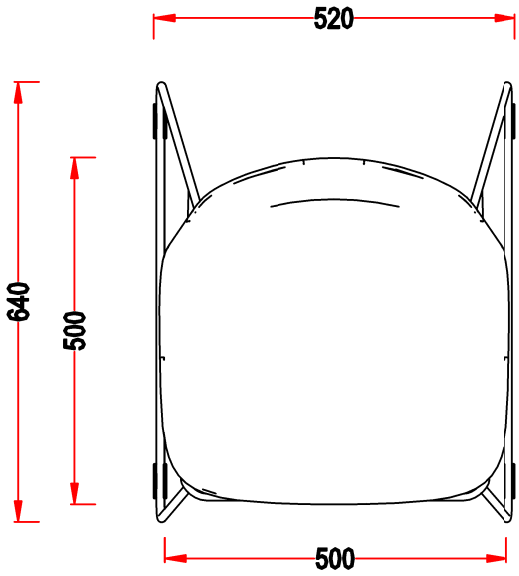

TOP VIEW

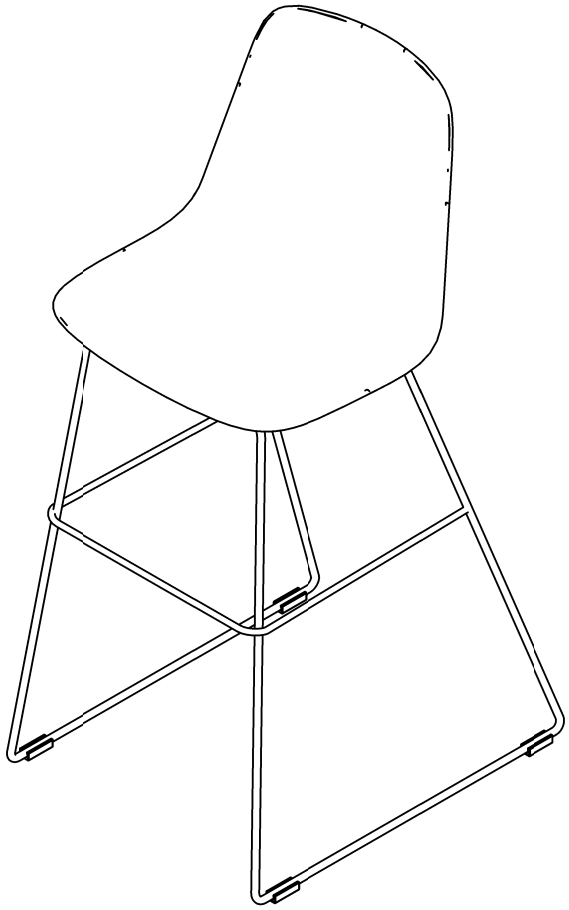

ISOMETRIC VIEW

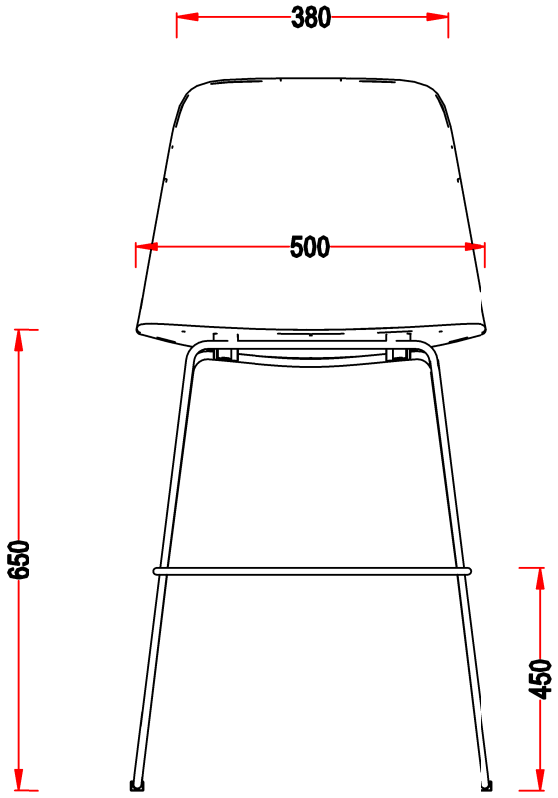

FRONT VIEW

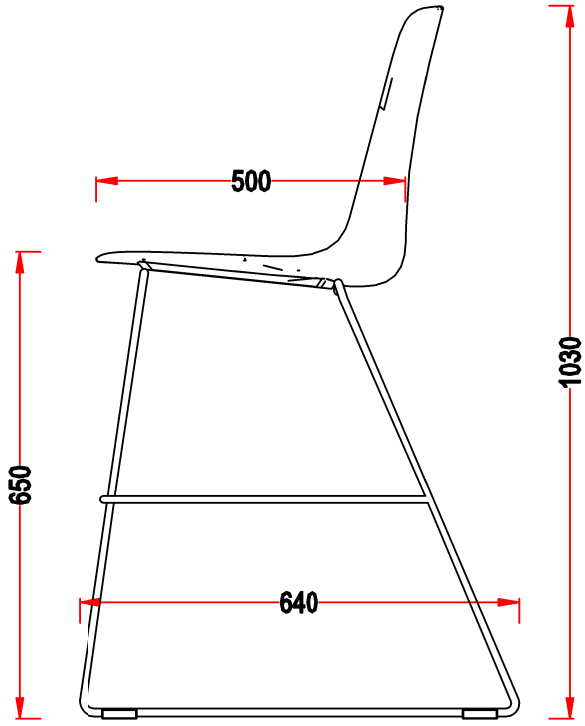

SIDE VIEW

READY2GO FURNITURE

PRODUCT CODE:	REMARKS:
LAYLA BENCH-650 CHAIR	-
ASSEMBLED SIZE: 500L x 500D x 1030H	

2024
READY TO GO FURNITURE PTY LTD

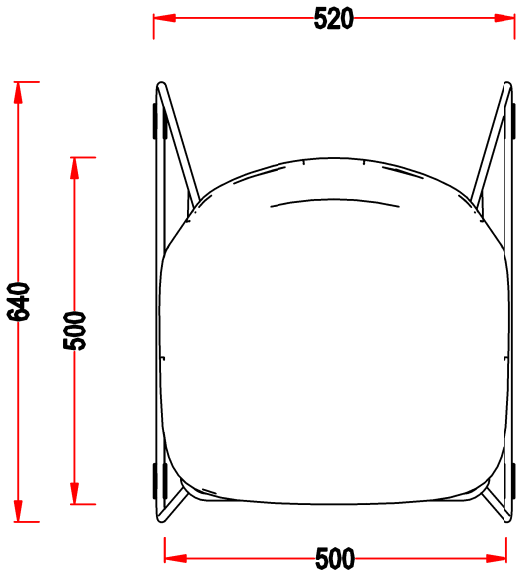

TOP VIEW

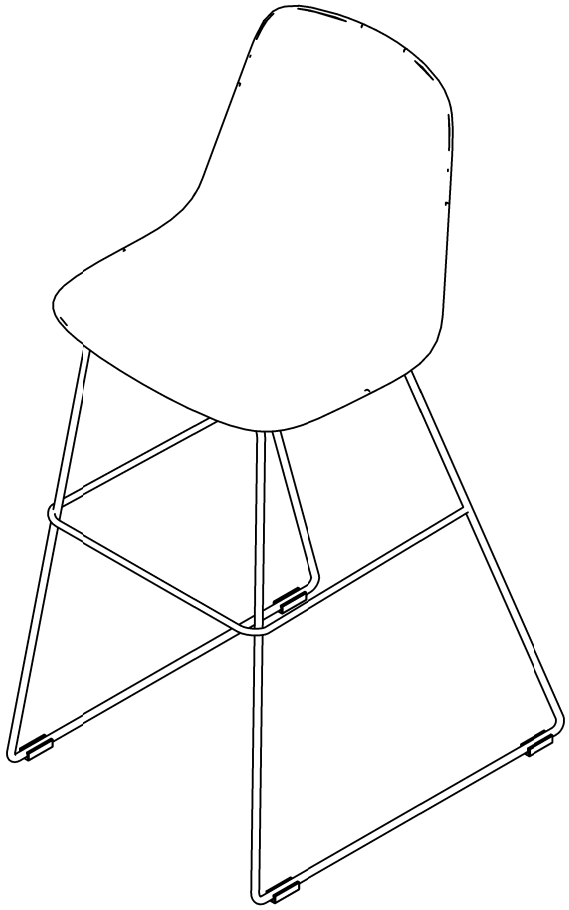

ISOMETRIC VIEW

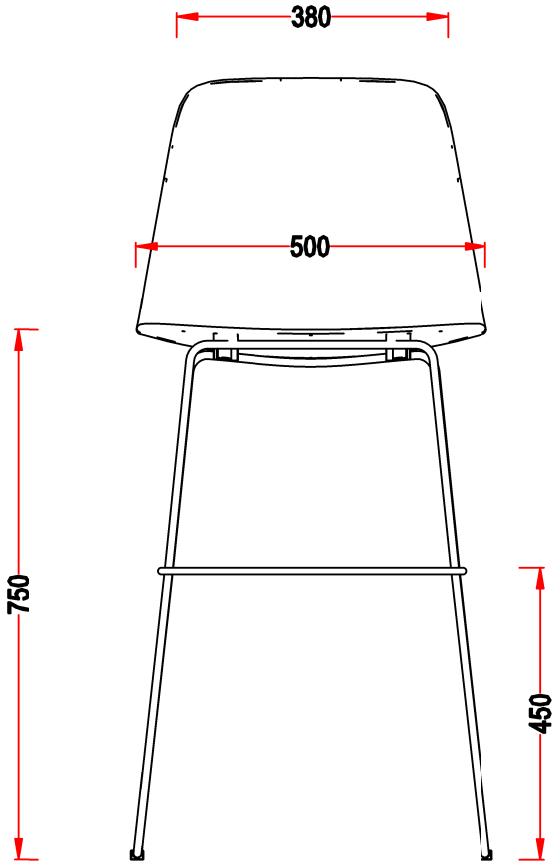

FRONT VIEW

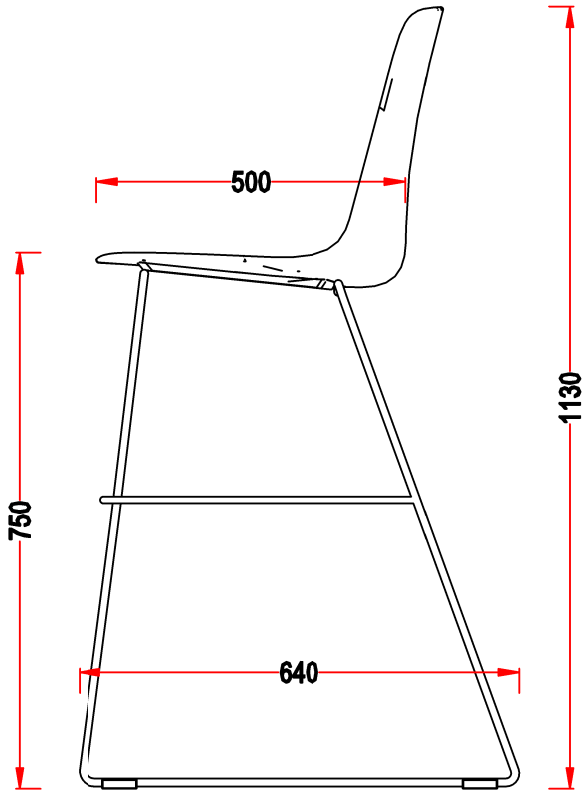

SIDE VIEW

READY2GO FURNITURE

PRODUCT CODE:	REMARKS:
LAYLA BENCH-750 CHAIR	-
ASSEMBLED SIZE: 500L x 500D x 1130H	

2024
READY TO GO FURNITURE PTY LTD