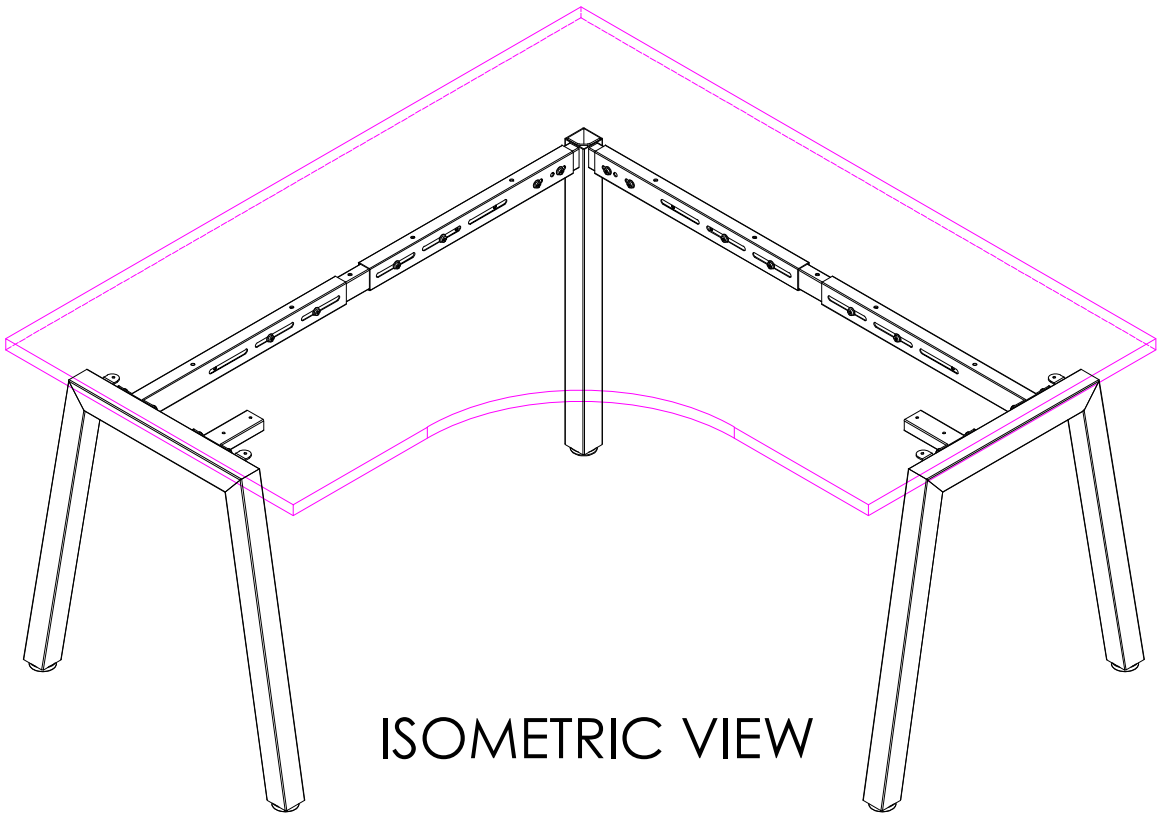

ISOMETRIC VIEW

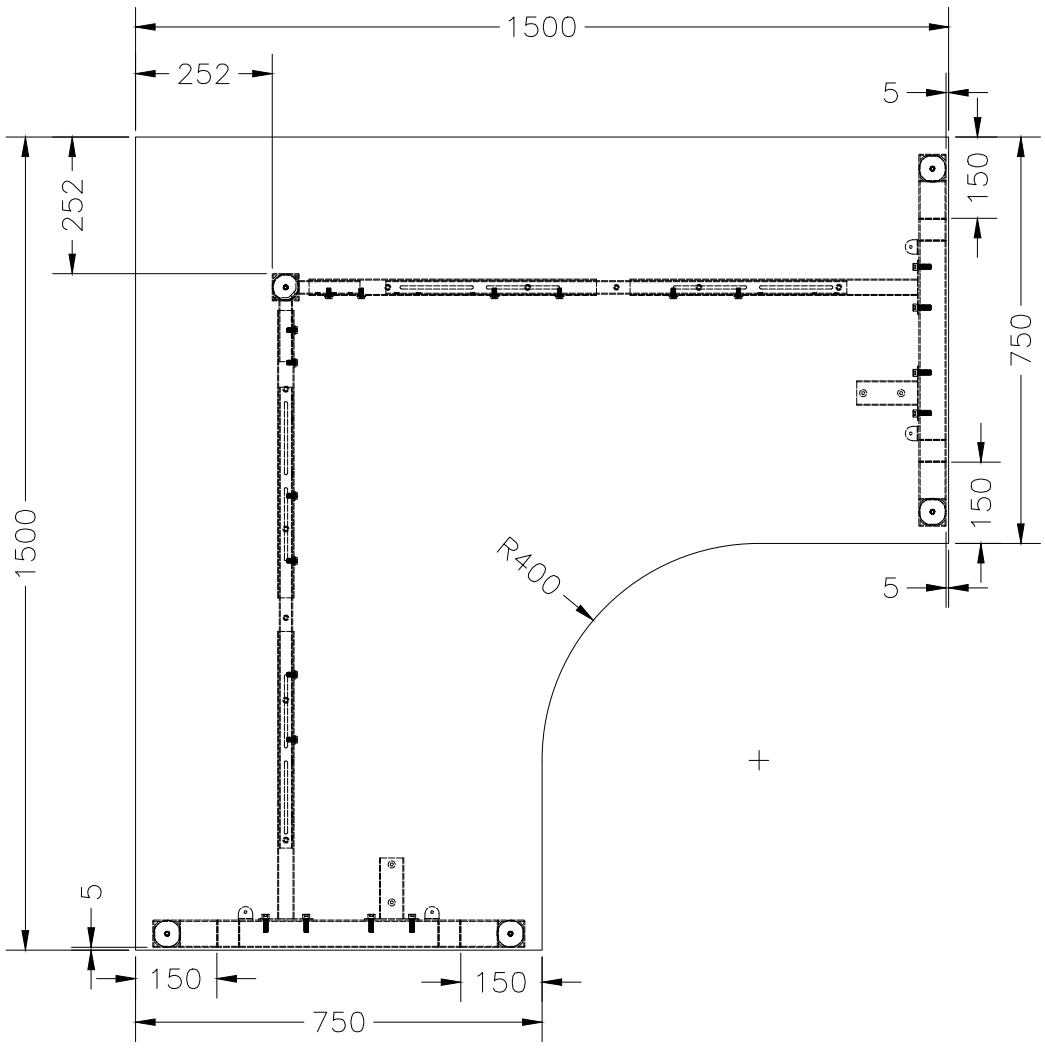

TOP VIEW

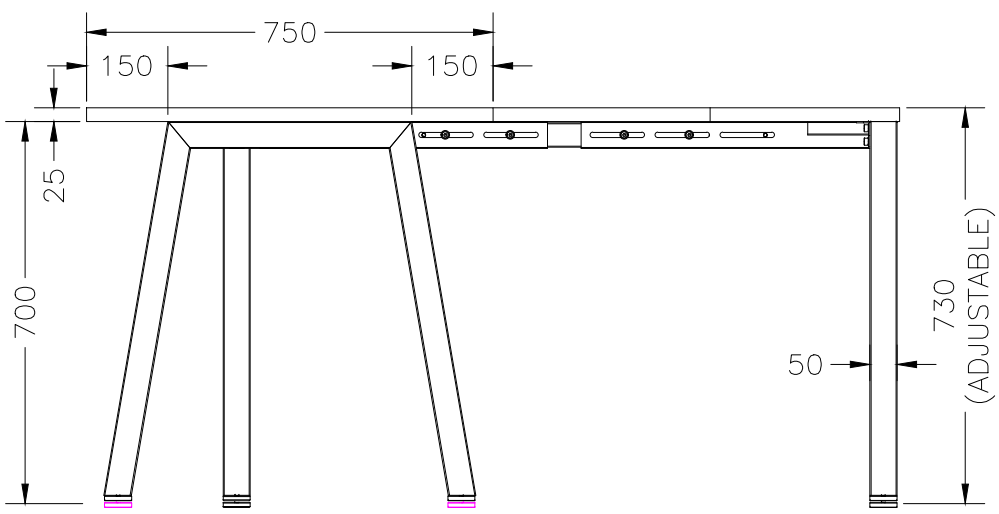

FRONT VIEW

READY2GO FURNITURE

PRODUCT CODE:	REMARKS:
AN-WS157	WST15157 + AN-LE75 + ST-AB1218
ASSEMBLED SIZE: 1500L x 1500D x 730H	

© 2020 READY TO GO FURNITURE PTY LTD

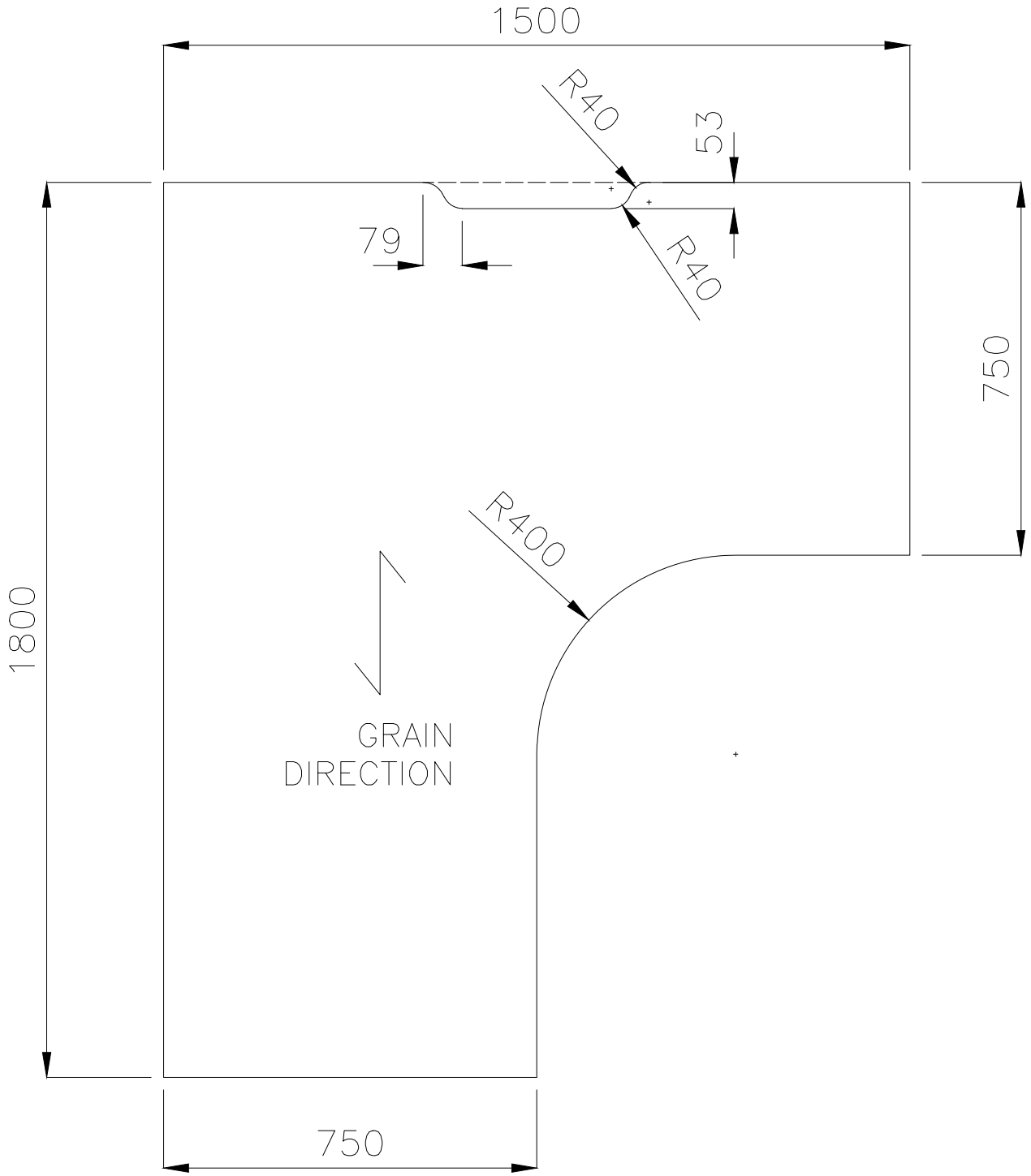

READY2GO FURNITURE

PRODUCT CODE:	REMARKS:
R2O-WST15187	-
ASSEMBLED SIZE:	
-	

2022
READY TO GO FURNITURE PTY LTD